Model Number

NBB15-30GM50-US-5M

Features

- **Basic series**
- **15 mm flush**
- **2-wire AC/DC**

Accessories

EXG-30
Quick mounting bracket with dead stop

Technical Data

General specifications		
Switching function		Normally open (NO)
Output type		Two-wire
Rated operating distance	s_n	15 mm
Installation		flush
Output polarity		AC/DC
Reduction factor r_{Al}		0.5
Reduction factor r_{Cu}		0.45
Reduction factor r_{304}		0.75
Output type		3-wire
Nominal ratings		
Operating voltage	U_B	20 ... 250 V AC/20 ... 300 V DC
Switching frequency	f	30 Hz
Hysteresis	H	3 ... 15 typ. 5 %
Reverse polarity protection		reverse polarity tolerant
Short-circuit protection		yes
Voltage drop	U_d	≤ 8 V
Operating current	I_L	4 ... 500 mA AC/DC
Off-state current	I_r	≤ 0.8 mA
Operating voltage indicator		LED, green
Switching state indicator		LED, yellow
Functional safety related parameters		
$MTTF_d$		1036 a
Mission Time (T_M)		20 a
Diagnostic Coverage (DC)		0 %
Ambient conditions		
Ambient temperature		-25 ... 70 °C (-13 ... 158 °F)
Storage temperature		-40 ... 85 °C (-40 ... 185 °F)
Mechanical specifications		
Connection type		cable PUR , 5 m
Core cross-section		0.5 mm^2
Housing material		brass, nickel-plated
Sensing face		PBT
Degree of protection		IP67
Compliance with standards and directives		
Standard conformity		
Standards		EN 60947-5-2:2007 EN 60947-5-2/A1:2012 IEC 60947-5-2:2007 IEC 60947-5-2 AMD 1:2012
Approvals and certificates		
UL approval		cULus Listed, General Purpose
CSA approval		cCSAus Listed, General Purpose
CCC approval		Certified by China Compulsory Certification (CCC)

Dimensions

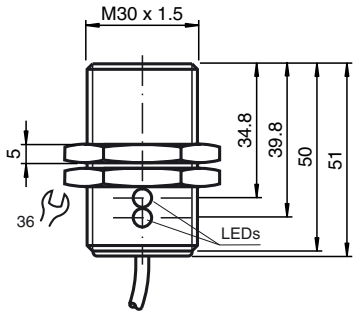

Electrical Connection

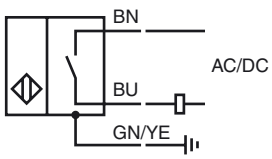

Release date: 2017-07-13 11:24 Date of issue: 2017-07-13 260655_eng.xml